METEKGRUP
anytime, anywhere

# Technology that fits your business.

PRODUCT AND SOFTWARE CATALOGUE

## Since 1999.

Workforce, access,
vehicle and site management.

## Software and hardware. Working in harmony.

www.metekgrup.com/en

# Since 1999, anytime, anywhere.

**METEK Grup Bilişim Teknolojileri A.Ş.** is a technology and IT company founded in 1999 and based in Ankara. As MEYER GROUP's hardware solution partner in Ankara, we provide hardware and METEK HERO software solutions for a range of sectors.

Alongside Time & Attendance and access control, we offer cafeteria, QR and barcode tracking and payment, e-campus and smart building solutions. Our portfolio includes turnstiles, barriers and number plate recognition, as well as IoT and data analytics applications.

For each project, we listen to your needs, identify suitable technology and support your digital transformation. We assess user numbers, working patterns, traffic volumes and existing infrastructure to plan the right mix of software and hardware.

Transparent communication, reliable service and customer satisfaction underpin our long-term partnerships. We aim to make technology more accessible and easier to use.

| 1999 | 450+ | 525,000+ |
|---|---|---|
| Established | Customers | Users |

EXPLORE THE CATALOGUE

**Products** Page 03-17
Readers, turnstiles and accessories →

**HERO software** Page 18
Workforce, access and site management →

**Contact** Page 19
Phone, email and address details →

**References** Page 20-30
Client and organisation logos →

# Card readers and control panels

Card, QR and multi-authentication readers, plus access control panels.

01 / 02




XIXBY

## XIXBY R1

Card reader




XIXBY

## XIXBY Q3

QR, barcode and card reader




XIXBY

## XIXBY D1

DESFire EV1 / EV2 card reader




XIXBY

## XIXBY U1

USB card reader




XIXBY

## XIXBY M1

Standalone keypad card reader




XIXBY

## XIXBY FC2

DESFire card programmer

Tap a product card to view the latest details on our website.

# Card readers and control panels

Card, QR and multi-authentication readers, plus access control panels.

02 / 02

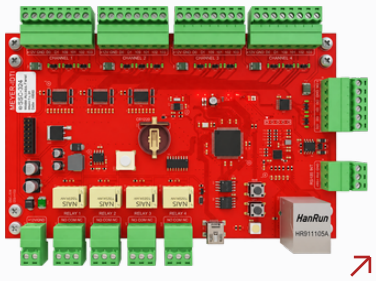


IDTI

## SSC-324

Access control panel




SUPREMA

## XPass 2

Outdoor card and mobile access reader




SUPREMA

## XPass Q2

QR, barcode, RFID and mobile access reader




SUPREMA

## X-Station 2

Terminal with card, QR and fingerprint options




XIXBY

## XIXBY A1

UHF RFID antenna and reader

Tap a product card to view the latest details on our website.

# Biometric readers

Readers and terminals for face and fingerprint authentication.



SUPREMA

## BioEntry P2

Fingerprint and card reader



SUPREMA

## BioEntry W2

Outdoor fingerprint terminal



SUPREMA

## BioMini

USB fingerprint enrolment reader



SUPREMA

## FaceStation F2

Facial recognition and multi-authentication terminal



SUPREMA

## BioStation 3

Facial recognition terminal

Tap a product card to view the latest details on our website.

# Turnstile systems

Tripod turnstiles, speed gates, full-height and accessible access options.

01 / 04

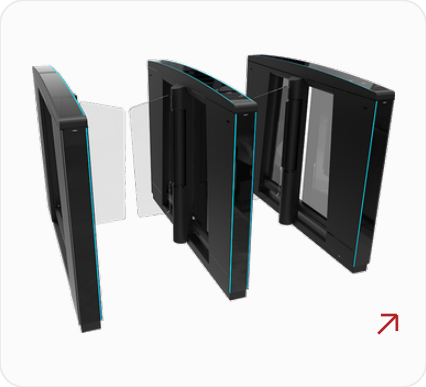

SPEED GATES

## PG04

Motorised swing speed gate



SPEED GATES

## HG02 V3

Sensor-controlled speed gate



SPEED GATES

## HG04

Glass-wing speed gate



SPEED GATES

## SG 55

Motorised sliding glass speed gate

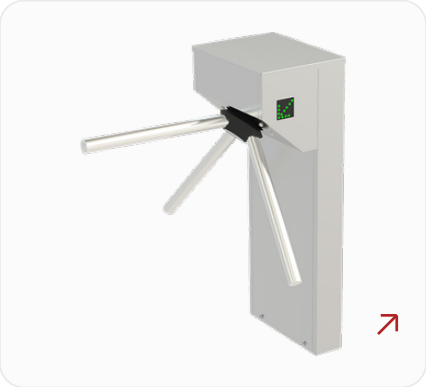

WAIST HEIGHT

## TP101

Single-pedestal tripod turnstile

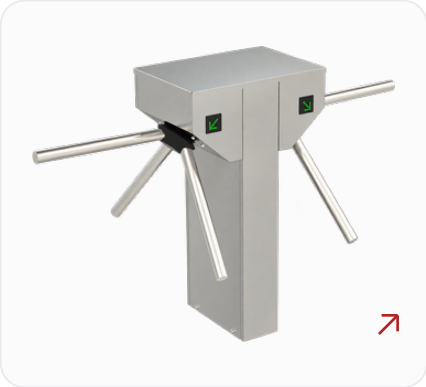

WAIST HEIGHT

## TP101 Double

Dual-mechanism waist-height tripod turnstile

Tap a product card to view the latest details on our website.

# Turnstile systems

Tripod turnstiles, speed gates, full-height and accessible access options.

02 / 04



WAIST HEIGHT

## TP201

Double-pedestal tripod turnstile



WAIST HEIGHT

## VP125

Motorised accessible gate



WAIST HEIGHT

## TP300R

Double-pedestal tripod turnstile



FULL HEIGHT

## BTC300 S/D

Three-arm full-height turnstile



FULL HEIGHT

## BT402 S/D

Four-arm roofed full-height turnstile



FULL HEIGHT

## BTC400 S/D

Four-arm full-height turnstile

Tap a product card to view the latest details on our website.

# Turnstile systems

Tripod turnstiles, speed gates, full-height and accessible access options.

03 / 04



FULL HEIGHT

## BT ROOF300

Three-arm roofed full-height turnstile

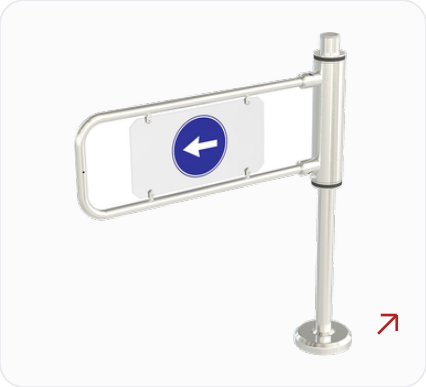

FREE PASSAGE

## SWG 101

Manual swing free-passage gate



FREE PASSAGE

## MRKT 404

Manual revolving free-passage turnstile



SPEED GATES

## GL A1

Swing gate



SPEED GATES

## GL A2

High-wing swing gate

Tap a product card to view the latest details on our website.

# Turnstile systems

Tripod turnstiles, speed gates, full-height and accessible access options.

04 / 04

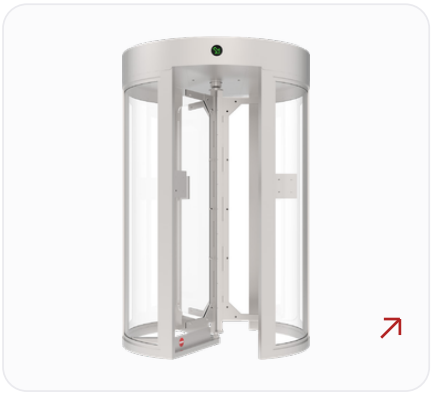

FULL HEIGHT

## BT 302 GL

Three-wing glass full-height turnstile



FULL HEIGHT

## BT 402 GL

Four-wing glass full-height turnstile

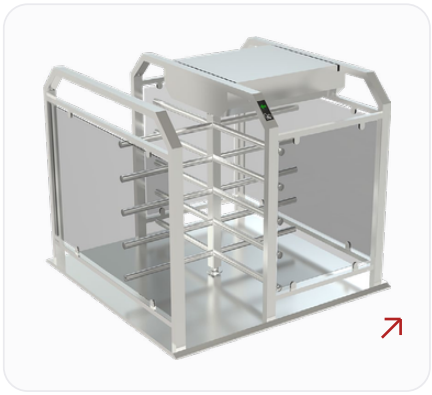

HALF HEIGHT

## HT 400 S

Four-arm half-height turnstile



HIGH SECURITY

## CGG SQ AIR

Motorised security access cabin



MOTORISED ACCESS GATE

## BT 100 Motorised

Full-height motorised pedestrian gate

Tap a product card to view the latest details on our website.

# Locks and door accessories

Magnetic locks, electric strikes and door hardware.

01 / 02




ASSA ABLOY

## MG-250 Series

Magnetic lock



ASSA ABLOY

## MG-250FM

Flush-mounted monitored magnetic lock



ASSA ABLOY

## E7R-02135E91

Electric strike



ASSA ABLOY

## MG-B251LZ

Magnetic lock mounting bracket



DORMAKABA

## DES

Security electric strike

Tap a product card to view the latest details on our website.

# Locks and door accessories

Magnetic locks, electric strikes and door hardware.

02 / 02



DORMAKABA

## EM Comfort

Magnetic lock series



DORMAKABA

## Basic XS

Standard electric strike



DORMAKABA

## TS Match

Slide-channel door closer



DORMAKABA

## TS Compact

Articulated-arm door closer

Tap a product card to view the latest details on our website.

# Exit buttons and accessories

Push-to-exit, emergency exit, touchless button and remote control options.

01 / 02




ASSA ABLOY

## ASSA ABLOY DCP-32

Resettable emergency exit button with protective cover



EXIT BUTTON SYSTEMS

## BT5

Slim surface-mounted push-to-exit button




EXIT BUTTON SYSTEMS

## BT7

Surface-mounted emergency break-glass button




EXIT BUTTON SYSTEMS

## BT7-RS

Resettable surface-mounted emergency exit button

Tap a product card to view the latest details on our website.

# Exit buttons and accessories

Push-to-exit, emergency exit, touchless button and remote control options.

02 / 02

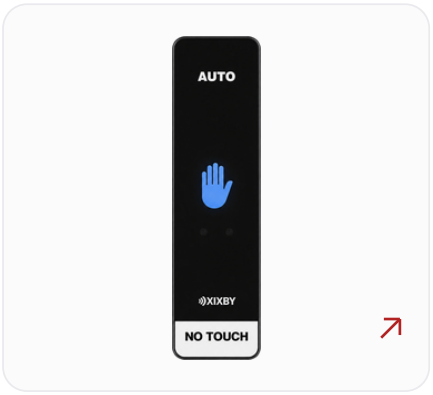


XIXBY

## XIXBY XT1

Slim infrared touchless exit button




XIXBY

## XIXBY XT2

Surface-mounted touchless exit button

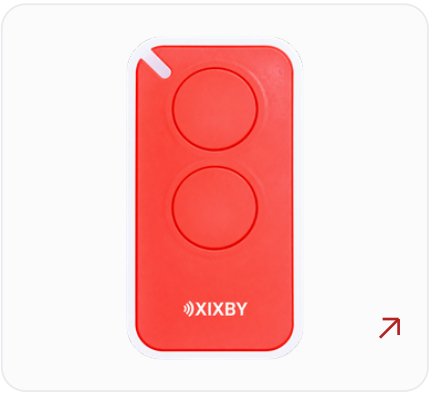


XIXBY

## XIXBY RC1

Wireless remote control

Tap a product card to view the latest details on our website.

# Barriers and vehicle access

Vehicle access hardware for car parks and facility entrances.

01 / 02



BOOM BARRIER

## G4000T

Electromechanical boom barrier



BOOM BARRIER

## G6000T

Electromechanical boom barrier




BOLLARD

## HBD/12

Hydraulic bollard




BOLLARD

## HBD/8

Hydraulic bollard



BOLLARD

## RBD/4

Hydraulic bollard

Tap a product card to view the latest details on our website.

# Barriers and vehicle access

Vehicle access hardware for car parks and facility entrances.

02 / 02



BOLLARD

## TBD Hydraulic

Hydraulic bollard




ROAD BLOCKER

## HRB

High-security road blocker



ROAD BLOCKER

## RRB

Reinforced road blocker



ROAD BLOCKER

## RB

Access control road blocker

Tap a product card to view the latest details on our website.

# Number plate recognition hardware

Number plate recognition cameras, trigger controllers and vehicle detectors.




HERO PTS

## HERO PTS Camera

4 MP motorized-lens camera for Automatic Number Plate Recognition




HERO PTS

## HERO PTS USB Trigger Controller

USB barrier triggering and LOOP monitoring controller




HERO PTS

## HERO PTS Ethernet Trigger Controller

PoE barrier trigger controller with Ethernet (TCP/IP) connectivity




NICE

## Nice LP22

Dual-channel inductive vehicle detector




HERO PTS

## HERO PTS Battery Detector

Battery-powered metal mass detector with RF connectivity

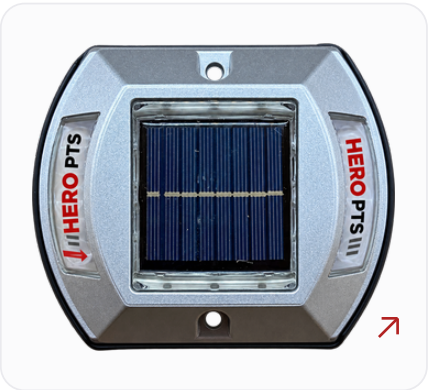


HERO PTS

## HERO PTS Solar Detector

Wireless metal mass detector with solar panel

Tap a product card to view the latest details on our website.

# Guard tour and mobile tracking

Checkpoints, portable readers and hardware for mobile applications.

## GUARD TOUR PRODUCTS




GUARD TOUR

### Rugged Handheld Terminal

Rugged Android handheld terminal for guard tour and site inspection projects



GUARD TOUR

### XIXBY T1 Guard Tour Reader

USB guard tour reader with 125 kHz RFID technology



GUARD TOUR

### Guard Tour Checkpoint

125 kHz Proximity or 13.56 MHz MIFARE guard tour checkpoint

## MOBILE TRACKING HARDWARE




HARDWARE

### BUUD Bluetooth Beacon

BLE proximity point for HERO Go

# The HERO software family.

HERO solutions for workforce, access, vehicle, cafeteria and site management.

## HERO T&A

Employee, shift, leave and timesheet management.

- Employee entry and exit records
- Shift and work schedules
- Leave and absence tracking
- Timesheets and reporting

## HERO Access

Managing door and area access permissions.

- Door and area access permissions
- Card, QR and biometric authentication
- Access activity and event records
- Panel and door hardware planning

## HERO PTS

Automatic Number Plate Recognition and vehicle access management.

- Number plate recognition
- Vehicle access authorisation
- Barrier control
- Car park entry and exit management

## HERO Cafeteria

Meal entitlements and cafeteria access management.

- Meal entitlement settings
- Cafeteria access records
- Usage and reporting
- Reader and turnstile options

## HERO Guard Tour

Guard tour and site inspection products.

- Patrol schedules and routes
- Checkpoints
- Visit and time records
- Reader and terminal options

## HERO go

Mobile Time & Attendance software.

- QR code generation
- Mobile clock-in and clock-out
- Leave requests
- Personal access records

# Let’s design the next step together.

Contact our team to discuss product selection, software scope and your project requirements.

PHONE

+90 312 286 0 330

EMAIL

proje@metekgrup.com

ADDRESS

Mustafa Kemal Mahallesi, 2146. Sokak
Safir Plaza No: 5, D: 8-9
06530 Çankaya / Ankara, Türkiye

OPENING HOURS

Weekdays 08:30-18:00
Closed at weekends

Connect with us

Scan or tap to open

**METEK Grup Bilişim Teknolojileri A.Ş.**

www.metekgrup.com/en

# Our references.

Organisations featured on our website, listed alphabetically.

01 / 11 · 1-40 / 431




















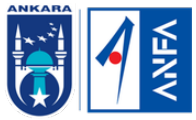





















# Our references.

Organisations featured on our website, listed alphabetically.

02 / 11 · 41-80 / 431













































































# Our references.

Organisations featured on our website, listed alphabetically.

03 / 11 · 81-120 / 431














































































# Our references.

Organisations featured on our website, listed alphabetically.

04 / 11 · 121-160 / 431














































































# Our references.

Organisations featured on our website, listed alphabetically.

05 / 11 · 161-200 / 431



# Our references.

Organisations featured on our website, listed alphabetically.

06 / 11 · 201-240 / 431



# Our references.

Organisations featured on our website, listed alphabetically.

07 / 11 · 241-280 / 431



# Our references.

Organisations featured on our website, listed alphabetically.

08 / 11 · 281-320 / 431
















































































# Our references.

Organisations featured on our website, listed alphabetically.

09 / 11 · 321-360 / 431














































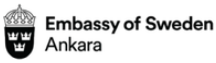































# Our references.

Organisations featured on our website, listed alphabetically.

10 / 11 · 361-400 / 431













































































# Our references.

Organisations featured on our website, listed alphabetically.

11 / 11 · 401-431 / 431


























































